ID	Description	Date	By	Appr.
A	New	04.12.2018	ATo	

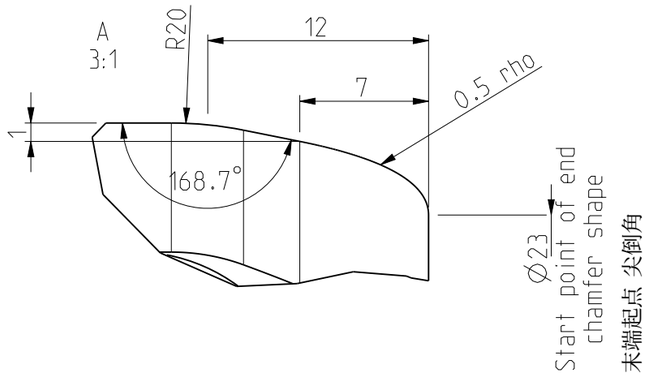

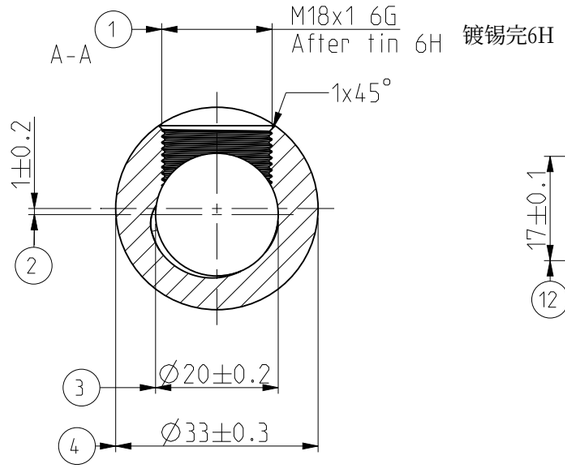

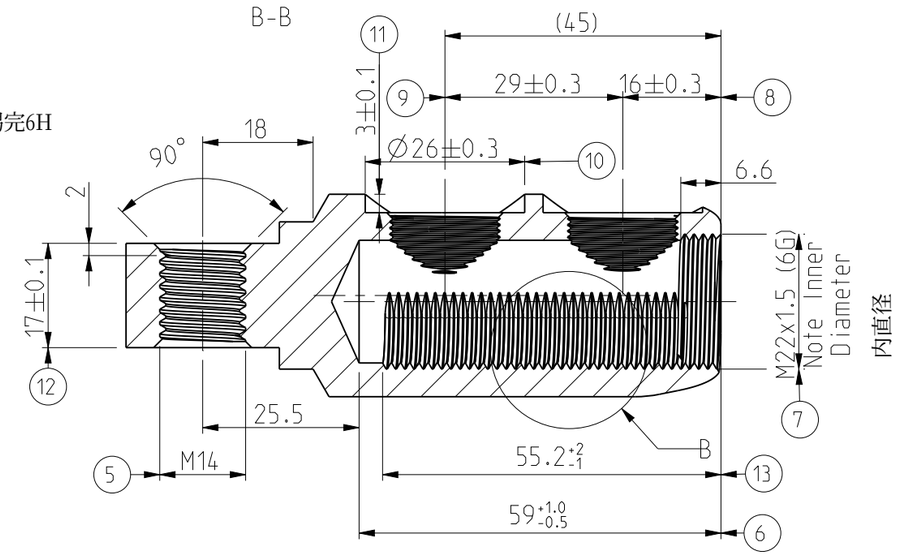

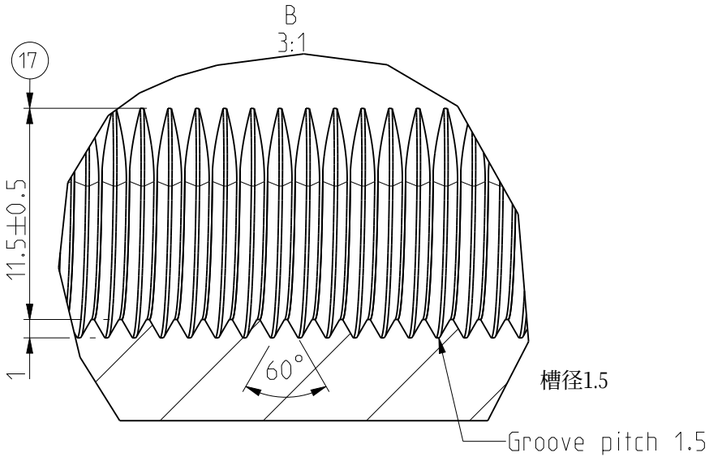

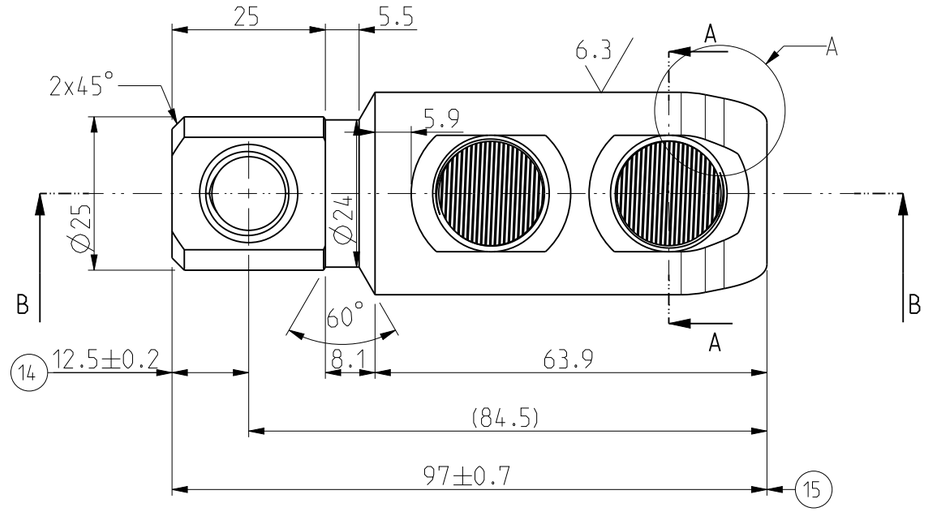

材料 6082 T6

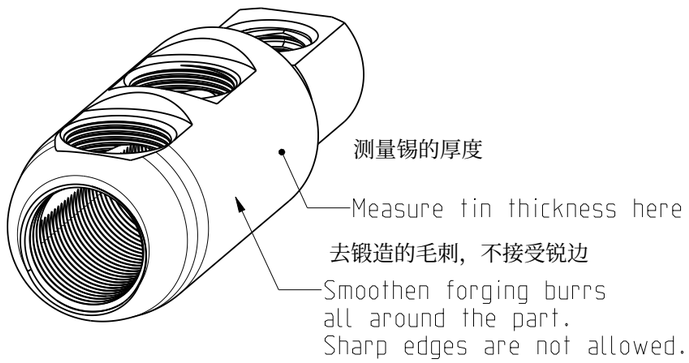

镀锡12UM（+2/-2） 热处理T6

Surface Treatment:	Tin plating 12um (+2/-2)
Heat Treatment:	T6
Inspection Instruction:	Inspection dimensions marked with numbers

Part	Code	Description	Pcs	Weight (g)/pcs
Supplier: –		Tool No: –	Volume –	Weight (g) 108
Material: AA6082 T6				

HICAREX

Scale 1:1 A3	Date	02.10.18
	By	ATo
	Checked	
Sheet No: 1 (1)	Ctrl	

Separable Connector Lug Body, Unmarked

50-240 mm², 400A

Replaces:

Replaced:

Drw No: 000444528 A

Ref: PDA240.400A

Code: PDA240.400A-B

Model PDA240-400A-B.PART [A]

Drawing PDA240-400A-B.DFW

Tolerance ISO 2768-m	>0.5 =3	> =6	>6 =30	>30 =120	>120 =400	>400 =1000
	±0.1	±0.1	±0.2	±0.3	±0.5	±0.8