REVISION	LOCATIONS	DESCRIPTION	DATE
C	PAGE 3 C6	ADDED NEW CASING FOOT PROFILE FOR WHEEL, ADDED CHAMFER AROUND BOLT HOLES IN PIN, INCREASED O-RING WIDTHS FOR BACKUPS	6-APR-16
D		VARIOUS CHANGES TO IMPROVE MACHINABILITY	12-APR-17

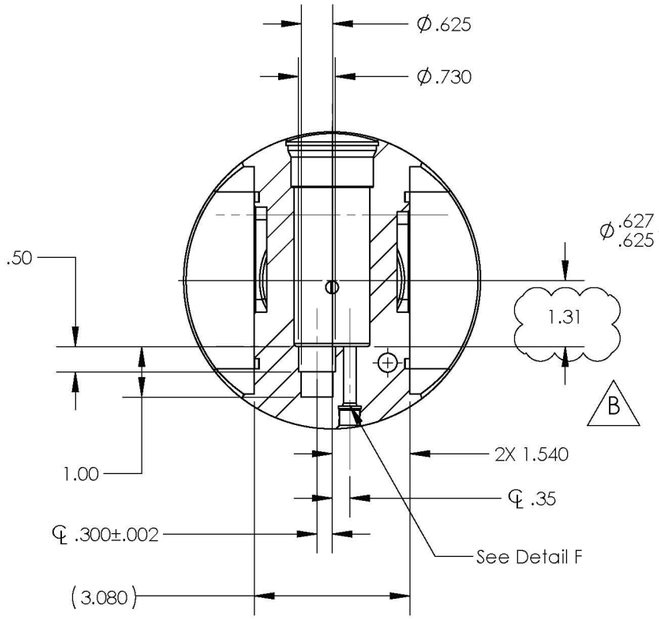

SECTION C-C
SCALE 1 : 3

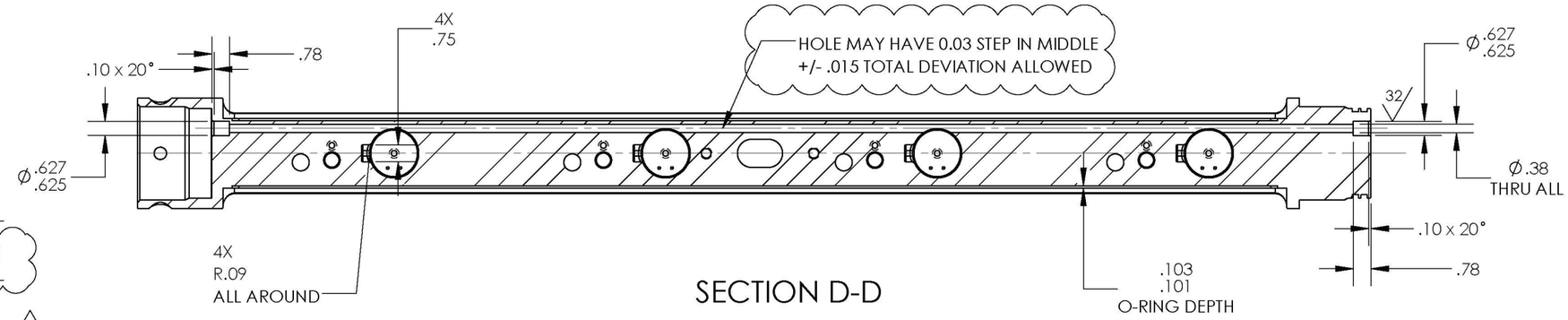

SECTION D-D

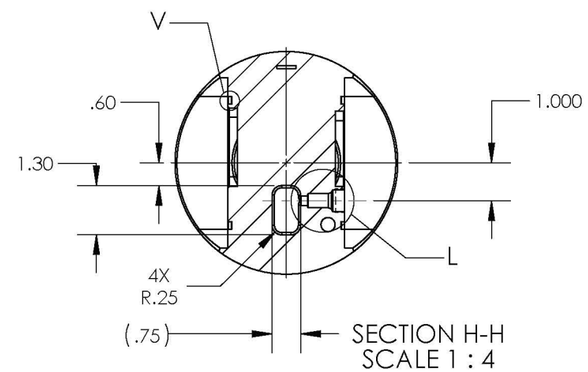

SECTION H-H
SCALE 1 : 4

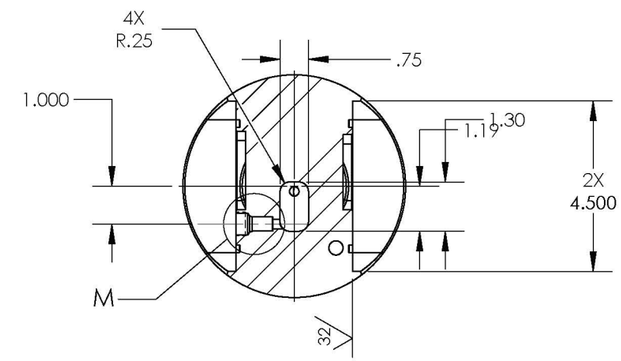

SECTION J-J
SCALE 1 : 4

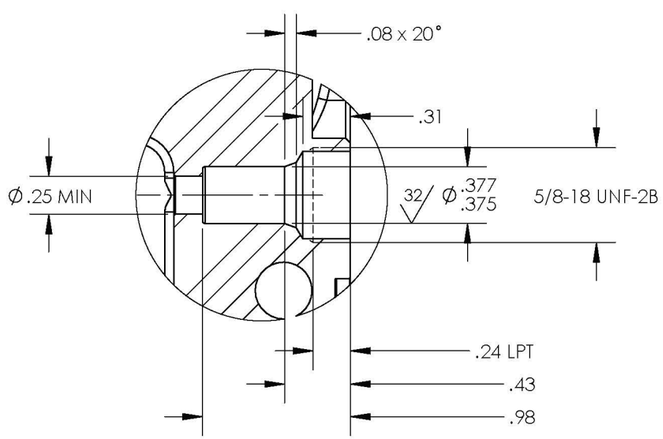

DETAIL L
SCALE 1 : 1

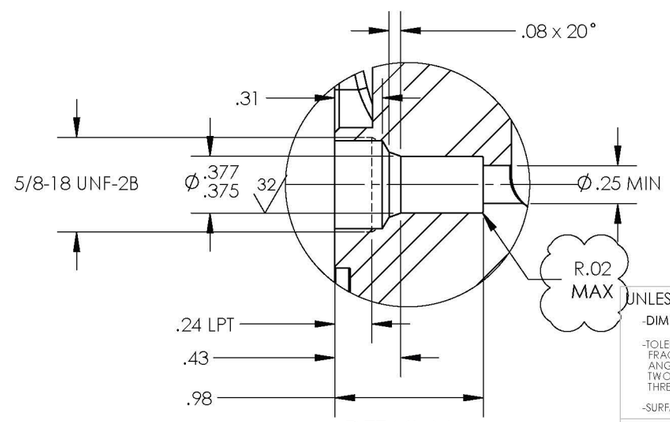

DETAIL M
SCALE 1 : 1

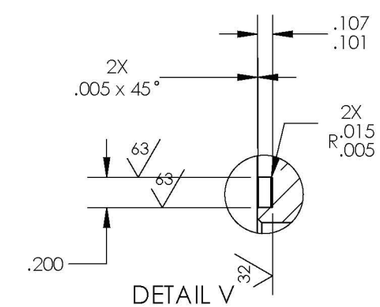

DETAIL V
2 GROOVES

NOTE: ALL CROSS SECTION VIEWS ORIENTED TO LOOK UP FROM PIN END
USE POSITION OF THROUGH HOLE FOR ORIENTATION

UNLESS OTHERWISE SPECIFIED:
-DIMENSIONS ARE IN INCHES
-TOLERANCES:
FRACTIONAL ± 1/32
ANGULAR: MACH ±1.0 BEND ±5.0
TWO PLACE DECIMAL ±.015
THREE PLACE DECIMAL ±.005
-SURFACE FINISH 63 RMS

	NAME	DATE
DRAWN	DSC	15-APR-16
CHECKED		
REVISED		12-APR-17

THIRD ANGLE PROJECTION

MATERIAL/COMMENTS:
15-15 LC

NEXT ASSY
TRANSDUCER MODULE ASSY

PROPRIETARY AND CONFIDENTIAL
THE INFORMATION CONTAINED IN THIS DRAWING IS THE SOLE PROPERTY OF TURKANA INC. ANY REPRODUCTION IN WHOLE OR PART WITHOUT THE WRITTEN PERMISSION OF TURKANA INC. IS PROHIBITED.

TITLE:

SIZE **B** DWG. NO. **1440** REV **D**

File Name 1440_TRANSDUCER MODULE

SCALE: 1:6 DO NOT SCALE DRAWING SHEET 3 OF 8